2107 VIPER-R SERIES

1. VIPER-R SERIES PARTS LIST :

Ref.#	Qty. Req.	Part Description
A	3	Cable guide (Silver)
B	1	Seat clamp
C	1	Crown race(2mm)
D	1	Compression
E	1	CO2 adaptor
F	1	Di2 Battery collar
G	1	Mini clamp
H	1	Headset
I	1	Gromment

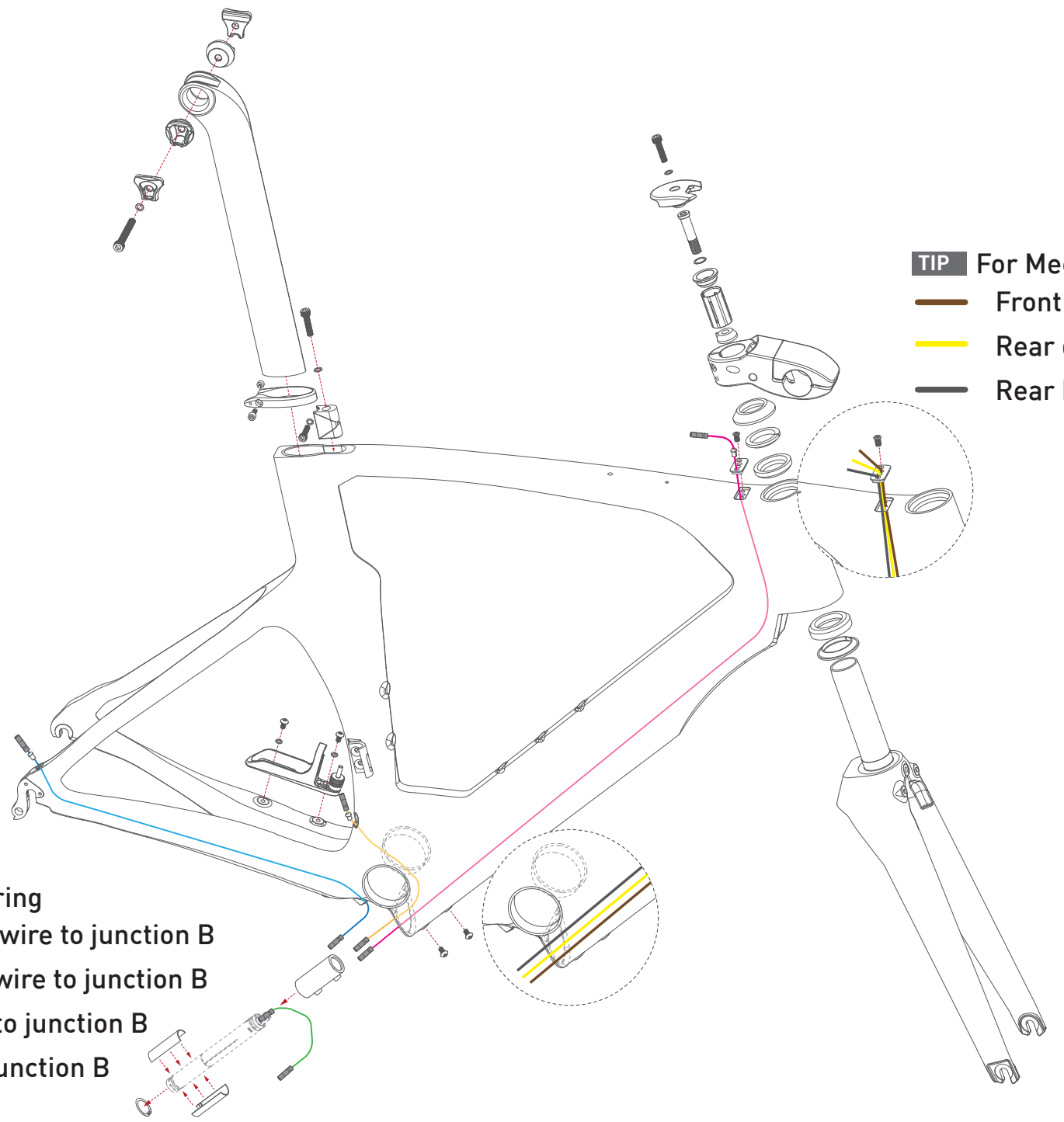

TRIATHLON SPECIFIC GEOMETRY

More assembly info available : please use link below.
http://www.ceepo.com/techinfo/

2017 VIPER-R SERIES 07/2016 Rev.1

2. Front derailleur wiring / Rear brake cable Instruction

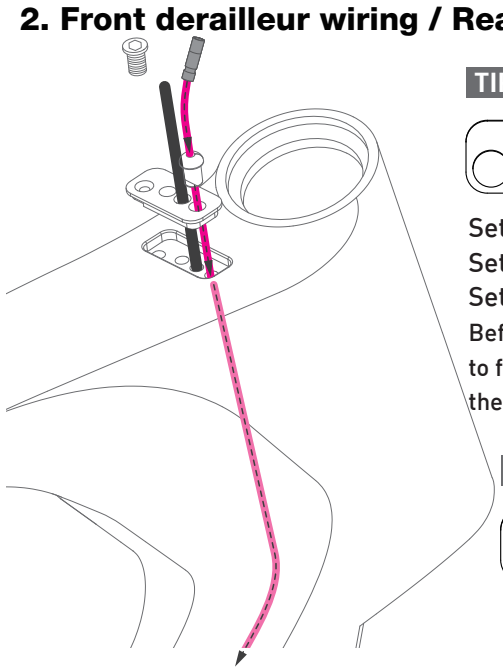

TIP For Electronic Wiring

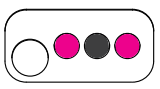

- Shifting wire
- Brake

Setp 1. Di2 wire enter from top tube.
Setp 2. Exit from down tube.
Setp 3. Insert the brake cable from top tube.
Before connecting Junction A, you can use tape to fix wires and cables while you complete the installation.

TIP For Mechanical Cabling

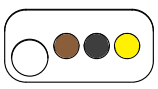

- Front Derailleur cable
- Rear Derailleur cable
- Brake

3. Front derailleur wiring installation

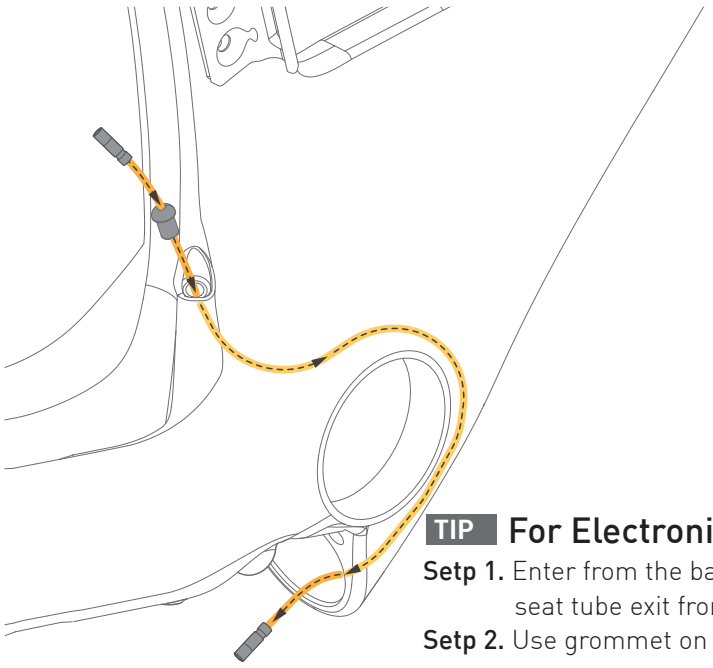

TIP For Electronic Wiring

Setp 1. Enter from the backside of seat tube exit from downtube.

Setp 2. Use grommet on the wire after installation.

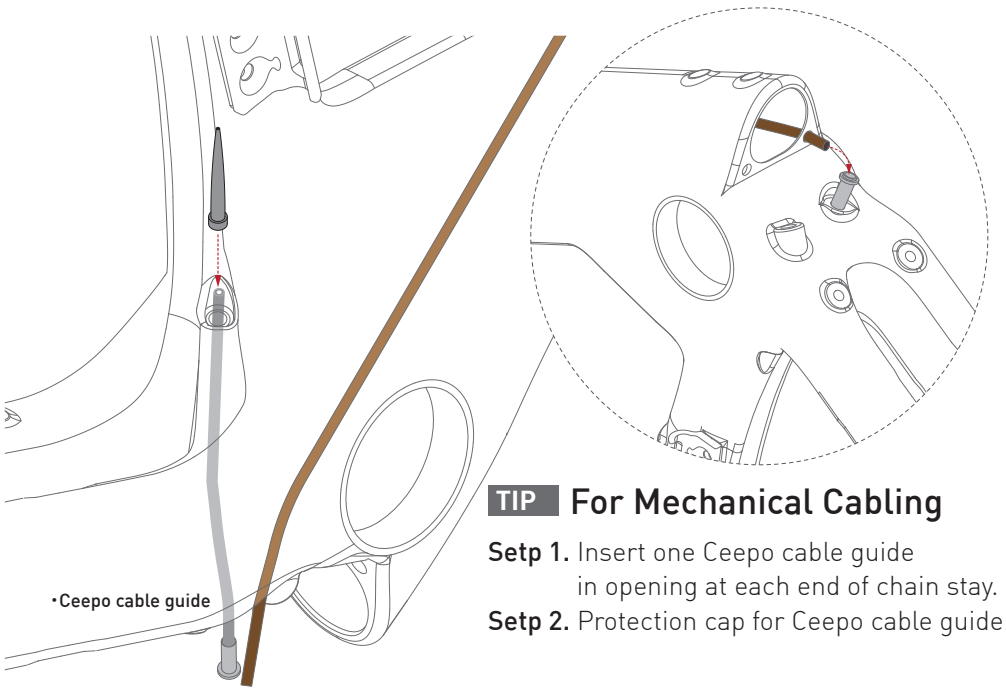

TIP For Mechanical Cabling

Setp 1. Insert one Ceepo cable guide in opening at each end of chain stay.

Setp 2. Protection cap for Ceepo cable guide.

4. Rear derailleur wiring installation

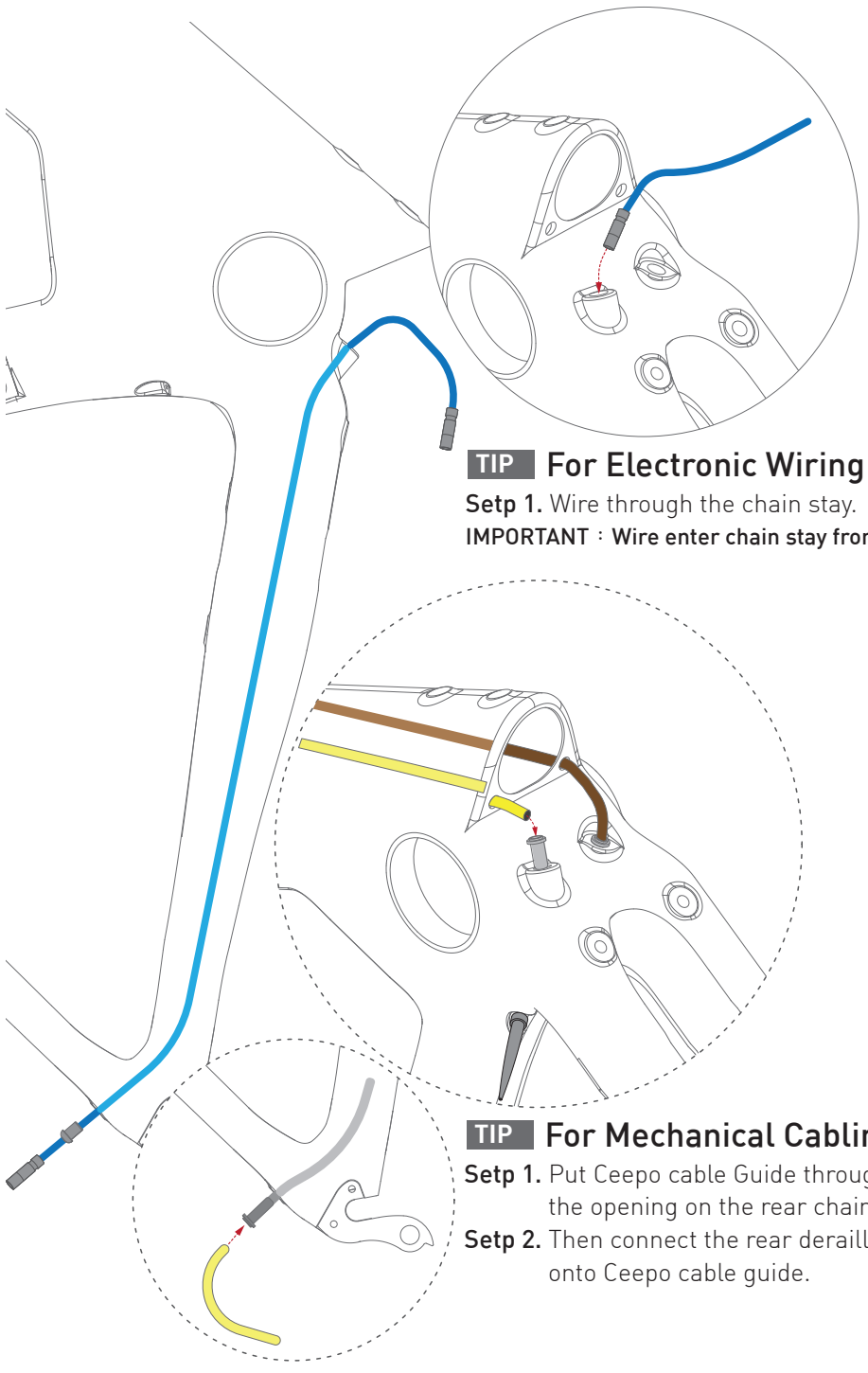

TIP For Electronic Wiring

Setp 1. Wire through the chain stay.

IMPORTANT：Wire enter chain stay from BB side.

TIP For Mechanical Cabling

Setp 1. Put Ceepo cable Guide through the opening on the rear chain stay.

Setp 2. Then connect the rear derailleur cable onto Ceepo cable guide.

5. Di2 Battery assembly

Ref.#	Qty. Req.	Part Description
A	1	Di2 Battery adaptor
B	2	Di2 Battery Collar
C	2	Adaptor Bolts
D	2	Cable tie *
E	3	Washer
F	1	Circlip internal

*Not pictured

Tools and materials required :
6mm Allen wrench、5mm Allen wrench & 3mm Allen wrench

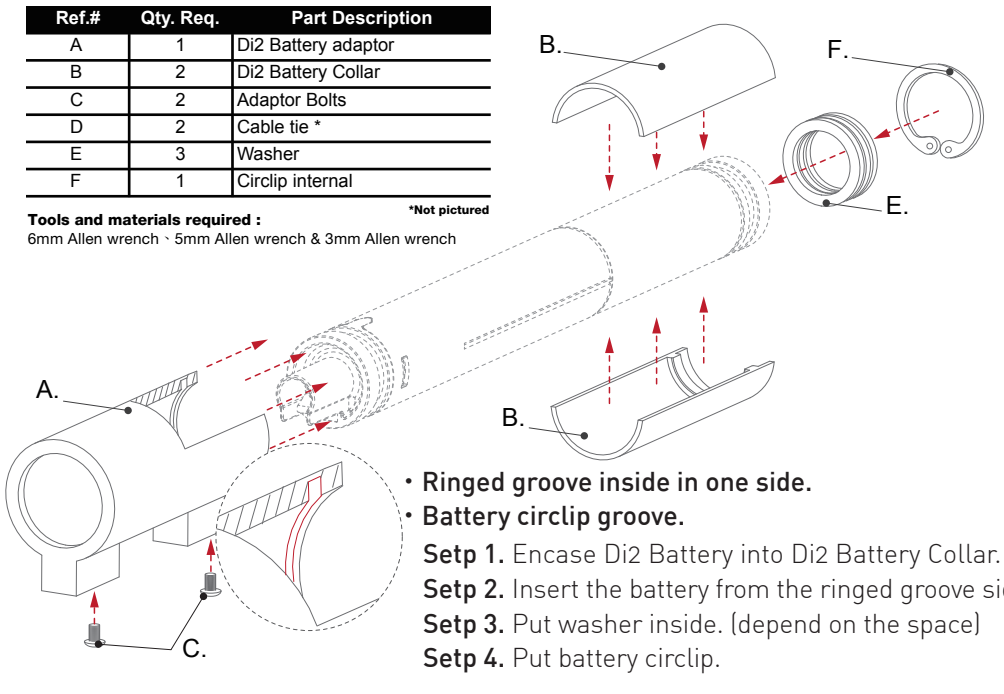

- **Ringed groove inside in one side.**
- **Battery circlip groove.**

Setp 1. Encase Di2 Battery into Di2 Battery Collar.

Setp 2. Insert the battery from the ringed groove side.

Setp 3. Put washer inside. (depend on the space)

Setp 4. Put battery circlip.

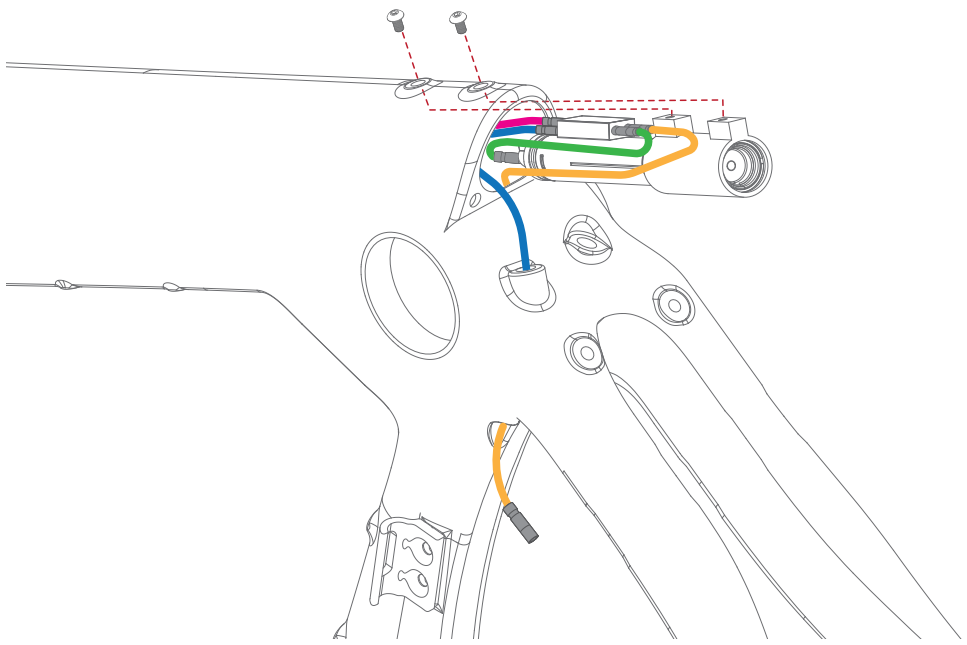

6. Seatpost installation

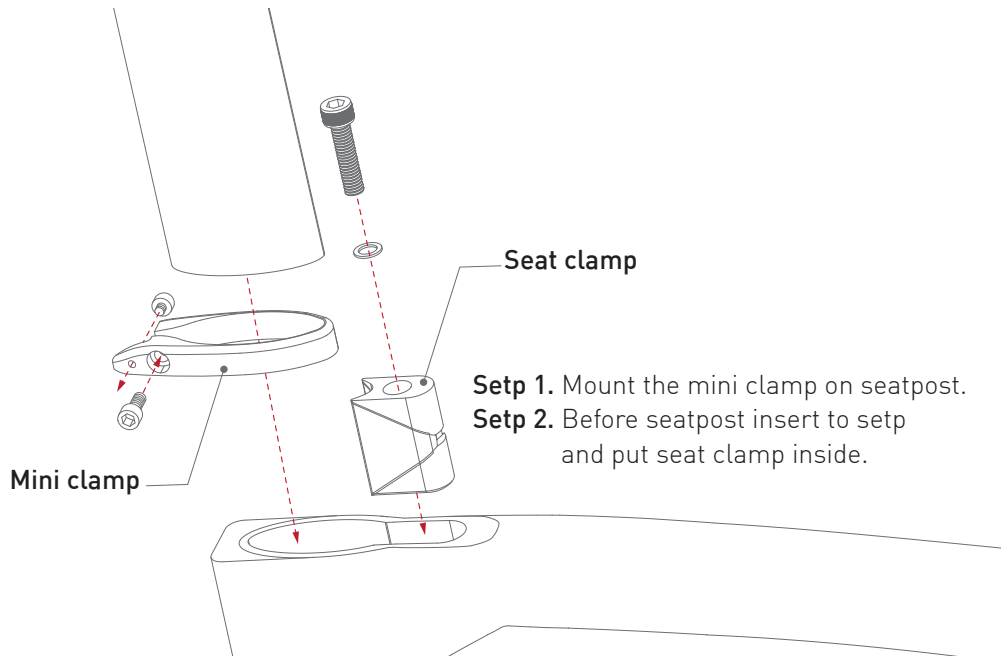

Setp 1. Mount the mini clamp on seatpost.

Setp 2. Before seatpost insert to setp and put seat clamp inside.
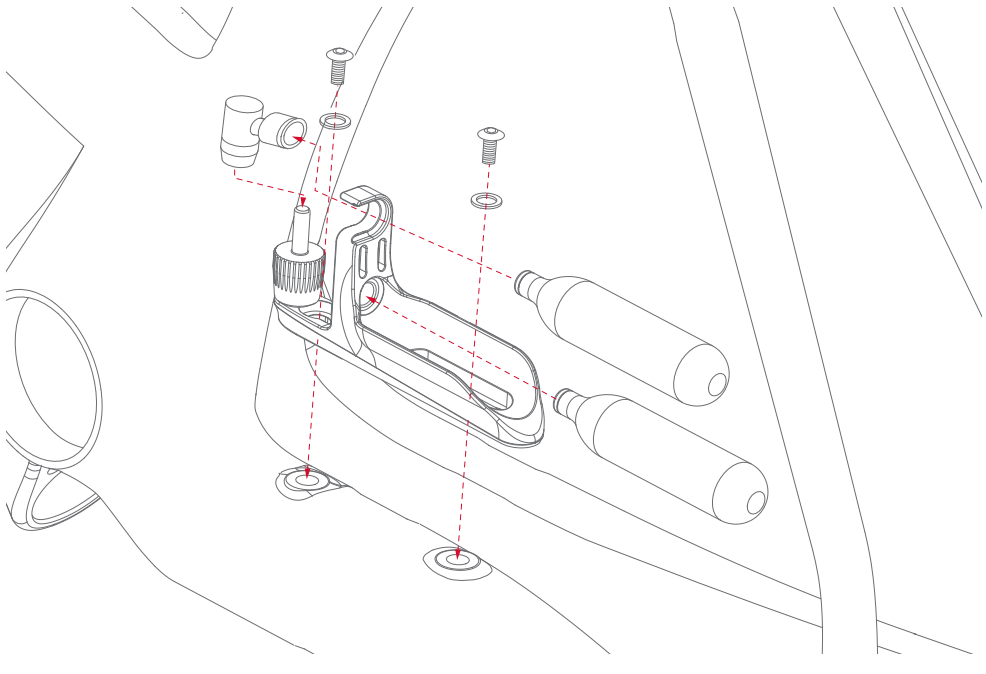
7. CO2 adaptor installation